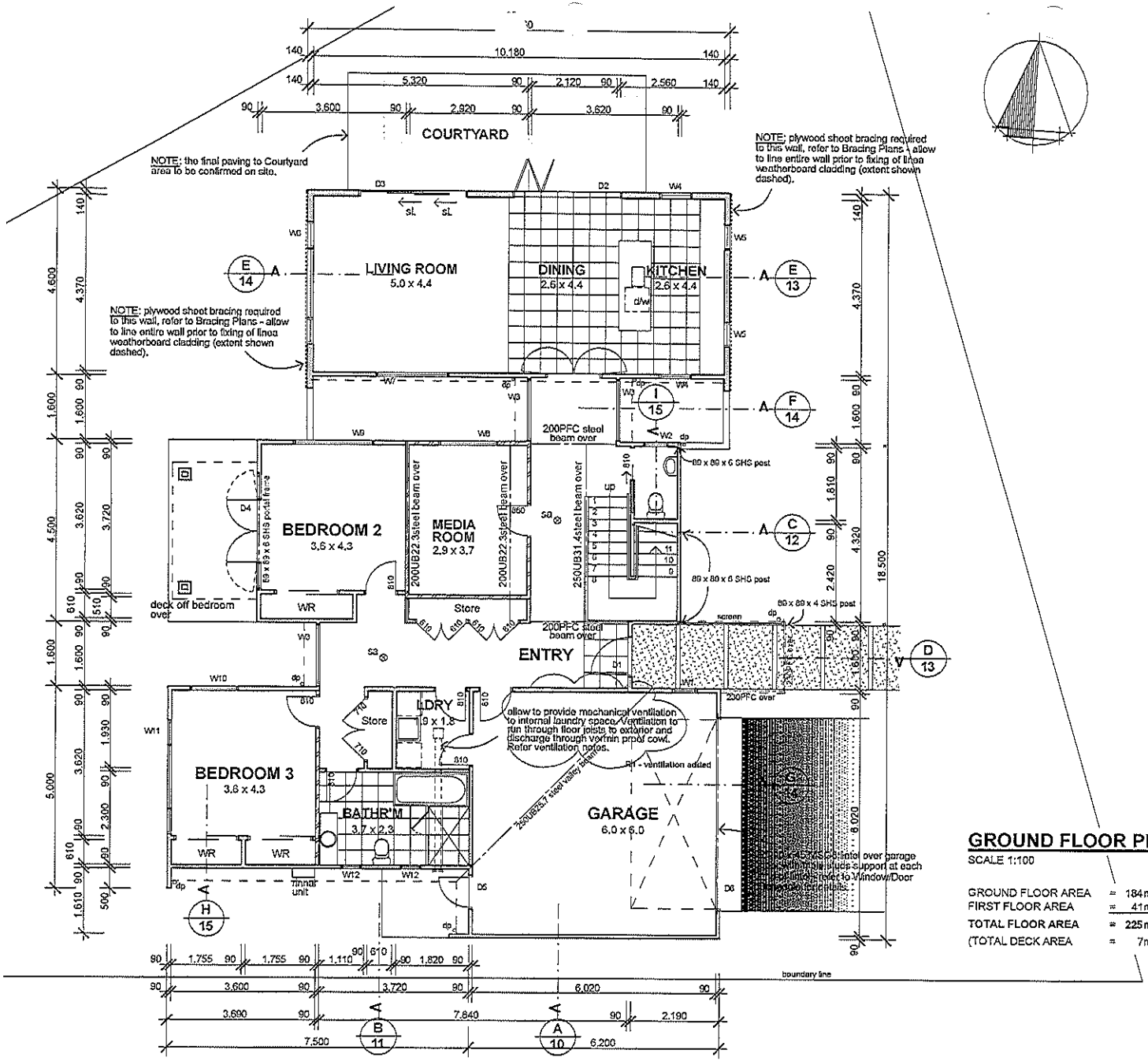

GROUND FLOOR PLAN

SCALE 1:100

GROUND FLOOR AREA	=	184m²
FIRST FLOOR AREA	=	41m²
TOTAL FLOOR AREA	=	225m²
(TOTAL DECK AREA	=	7m²)

DOMESTIC SMOKE ALARMS

Smoke alarms shall be located on the escape routes on all levels within the household unit. On levels containing sleeping spaces, the smoke alarms shall be located either:

a) In every sleeping space, or

b) Within 3.0 m of every sleeping space door. In this case the alarms must be audible to the sleeping occupants on the other side of closed doors.

The smoke alarms shall be hard-wired and fitted with a hush facility.

sa ⊗ *indicates smoke alarm*

LININGS SCHEDULE

- generally walls are to be lined with 10mm thick standard Gib Board fixed and stopped for level 4 paint finish.
- refer to bracing plan for areas of wall linings that are scheduled to be 10mm Gib Bracoline.
- walls to wet areas (bathrooms, ensuites & laundry) to be lined with 10mm thick Gib Aqualine fixed and stopped for a level 4 paint finish.
- generally ceiling to be lined with 13mm thick standard Gib Board fixed and stopped for level 4 paint finish.
- ceilings to wet areas (bathrooms, ensuites & laundry) to be lined with 10mm thick Gib Aqualine fixed and stopped for a level 4 paint finish.

GENERAL NOTES:

All studs to load bearing walls at 400mm crs unless otherwise stated

NOTE : ALL INTERNAL GROUND FLOOR DOORS ARE 2.200m HIGH UNLESS OTHERWISE STATED

→ht indicates hose tap

MECHANICAL VENTILATION

allow to mechanically ventilate the rooms listed below through roof or wall to outside and fit weatherproof cowl to same. Mechanical ventilation to comply with NZBC G4/AS1 clause 1.5 and AS 1668.2 Table B2.

Ensuite	ceiling fan above shower
Bathroom	ceiling fan above shower
Laundry	vent dryer thru outside wall
Kitchen	rangehood duct to outside wall

FLOOR PLAN LEGEND

- indicates timber framed wall
- indicates sound rated walls - sound batts in wall framing.
- indicates internal timber framed to Garage with insulation batts.

GAS NOTE:

New Rinnai Infinity 26i instantaneous hot water system to be connected to the existing local reticulated gas supply.

BUILDING CONSENT ISSUE

mike snowman design Ltd ARCHITECTURE
PO Box 236, Dunedin
Tel. 03 470 1080
Fax 03 470 1088
Mobile 0275 686 831
email: info@msdesign.co.nz

A|D NZ

DAVID REID HOMES CENTRAL LTD
© DAVID REID HOMES CENTRAL LTD
Phone (03) 443-1352
Fax (03) 443-1348

PROPOSED NEEDHAM RESIDENCE
PENINSULA BAY - WANAKA

R1	ventilation of laundry added at direction of council	28-03-11

CN10-1051

FEB 2011

03 R1

DO NOT SCALE OFF DRAWINGS. ALL DIMENSIONS TO BE VERIFIED ON SITE PRIOR TO CONSTRUCTION PRINT DATE - 30/03/2011

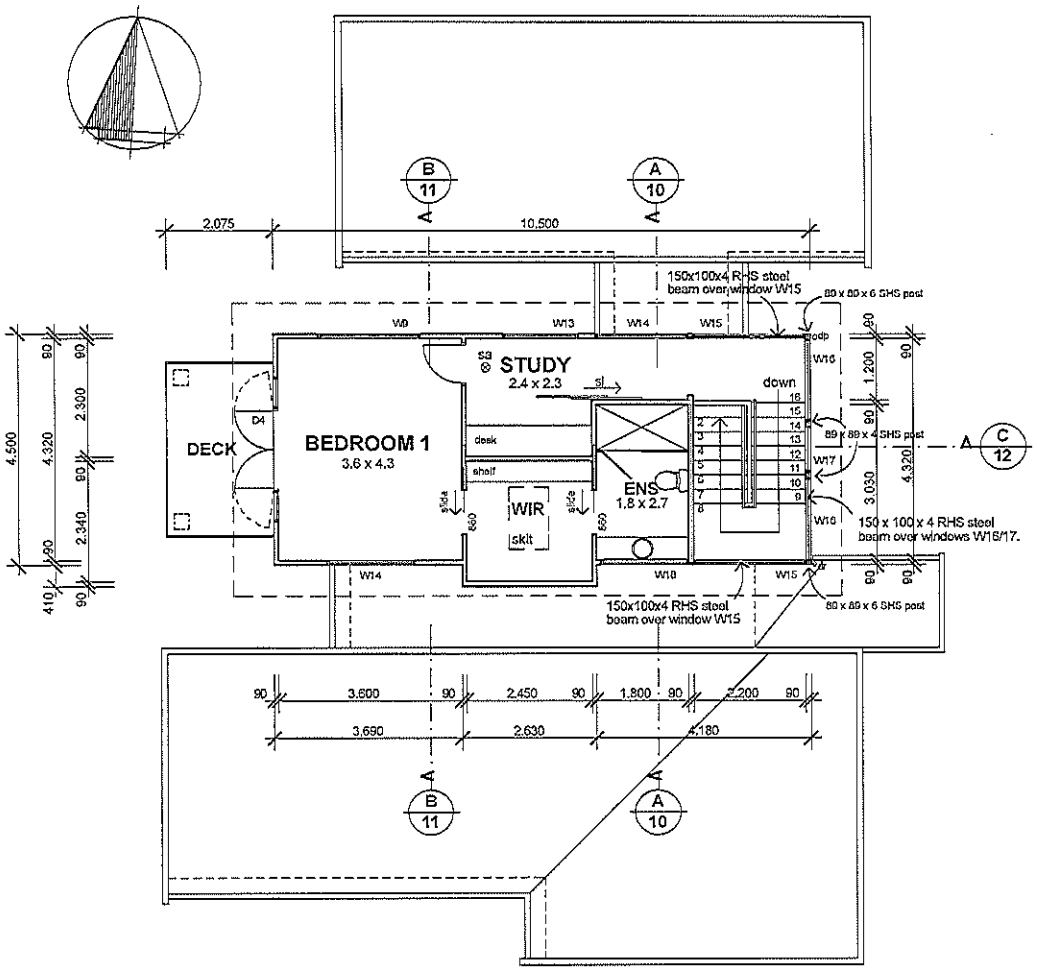

FIRST FLOOR PLAN

SCALE 1:100

GROUND FLOOR AREA	=	184m²
FIRST FLOOR AREA	=	41m²
TOTAL FLOOR AREA	=	225m²
(TOTAL DECK AREA	=	7m²)

DOMESTIC SMOKE ALARMS

Smoke alarms shall be located on the escape routes on all levels within the household unit. On levels containing sleeping spaces, the smoke alarms shall be located either:

a) In every sleeping space, or

b) Within 3.0 m of every sleeping space door. In this case the alarms must be audible to the sleeping occupants on the other side of closed doors.

The smoke alarms shall be hard-wired and fitted with a hush facility.

sa ⊗ *indicates smoke alarm*

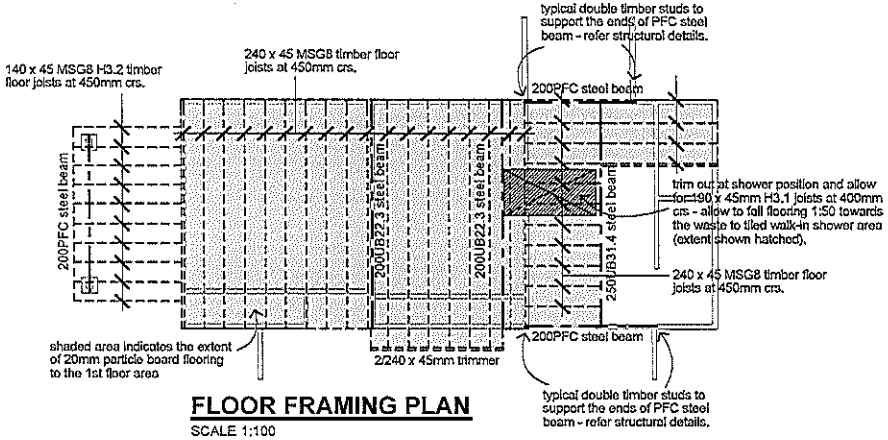

FLOOR FRAMING PLAN

SCALE 1:100

STEEL BEAM NOTE:
Steel beams to be supported on double timber studs in braced wall unless noted otherwise - refer to steel beam details.

ENSUITE NOTE:
allow for under tile heating to Ensuite

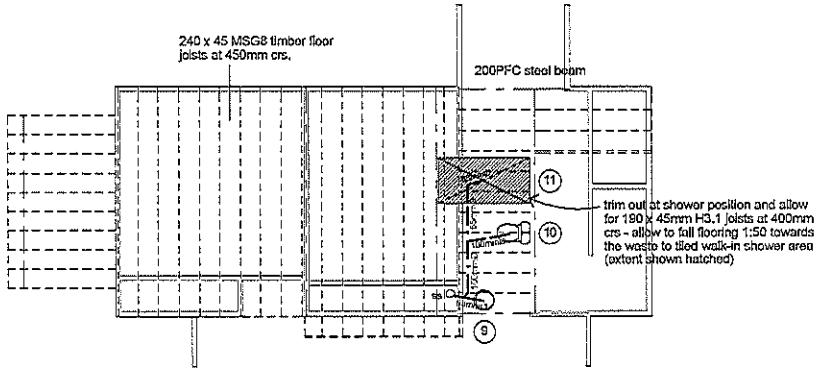

FIRST FLOOR PLUMBING PLAN

SCALE 1:100

PLUMBING NOTES

9 whb - 40mm Ø wastepipe from fitting to connect into 65mm Ø waste within the floor framing and in turn into 100mm Ø soil stack.

10 wc - 100mm Ø waste from wc pan within the floor framing and in turn into 100mm Ø soil stack.

11 shwr - easiclean waste to shower to connect into 65mm Ø waste within the floor framing and in turn into 100mm Ø soil stack.

NOTE: The Plumbing layout has been designed as for AS/NZS3500.2.2:1995 with all vertical soil stacks to be vented to roof.

BUILDING CONSENT ISSUE

mike newman design ltd
architecture
PO Box 236, Dunedin
Tel. 03 470 1080
Fax 03 470 1088
Mobile 0276 666 831
email: info@msdesign.co.nz

AIDNZ architectural designers nz

DAVID REID HOMES CENTRAL

© DAVID REID HOMES CENTRAL LTD

Phone (03) 443-1352
Fax (03) 443-1348

PROPOSED NEEDHAM RESIDENCE
PENINSULA BAY - WANAKA

CN10-1051

FEB 2011

04

DO NOT SCALE OFF DRAWINGS. ALL DIMENSIONS TO BE VERIFIED ON SITE PRIOR TO CONSTRUCTION PRINT DATE - 30/03/2011